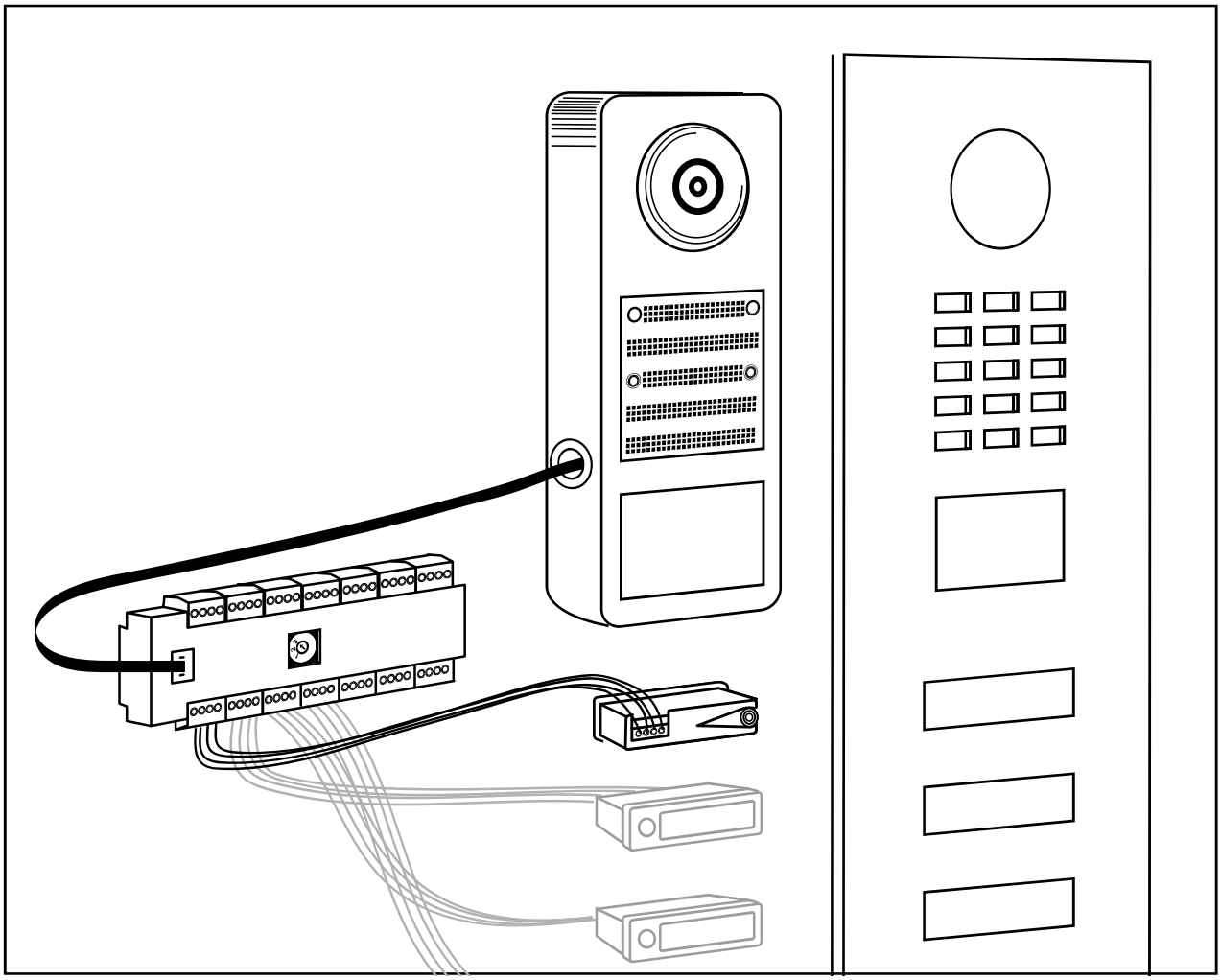

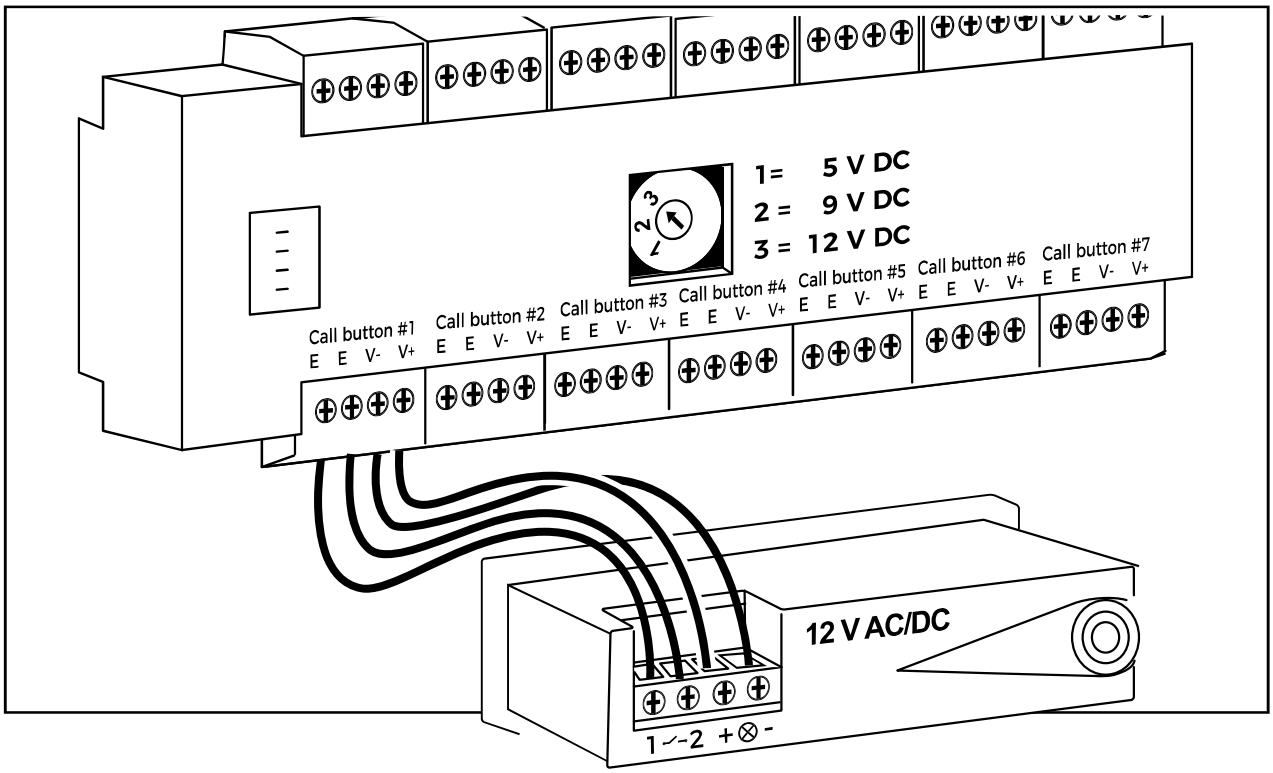




Errors and omissions excepted. | Last update 02/2025 - Copyright © ASSA ABLOY – www.doorbird.com

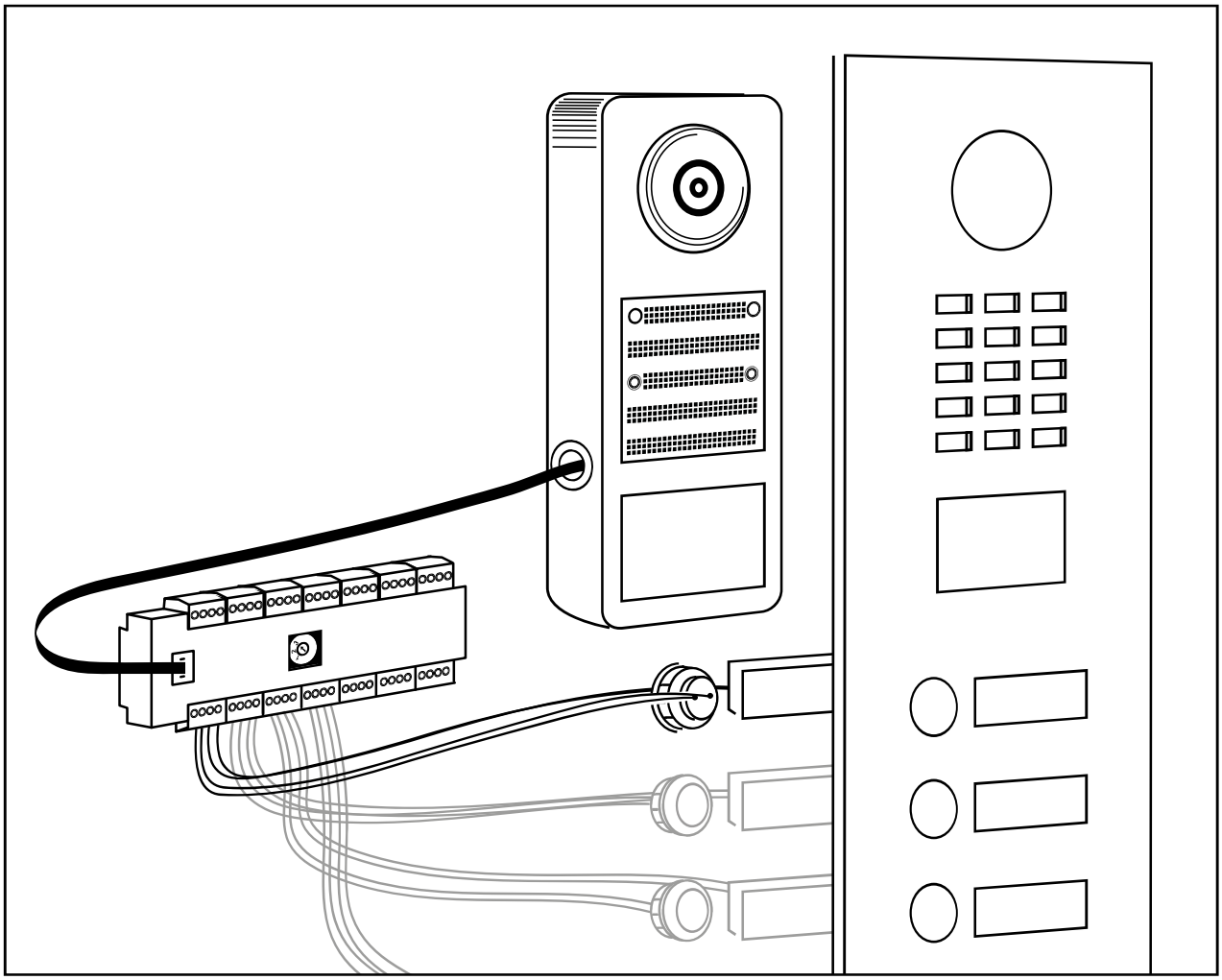

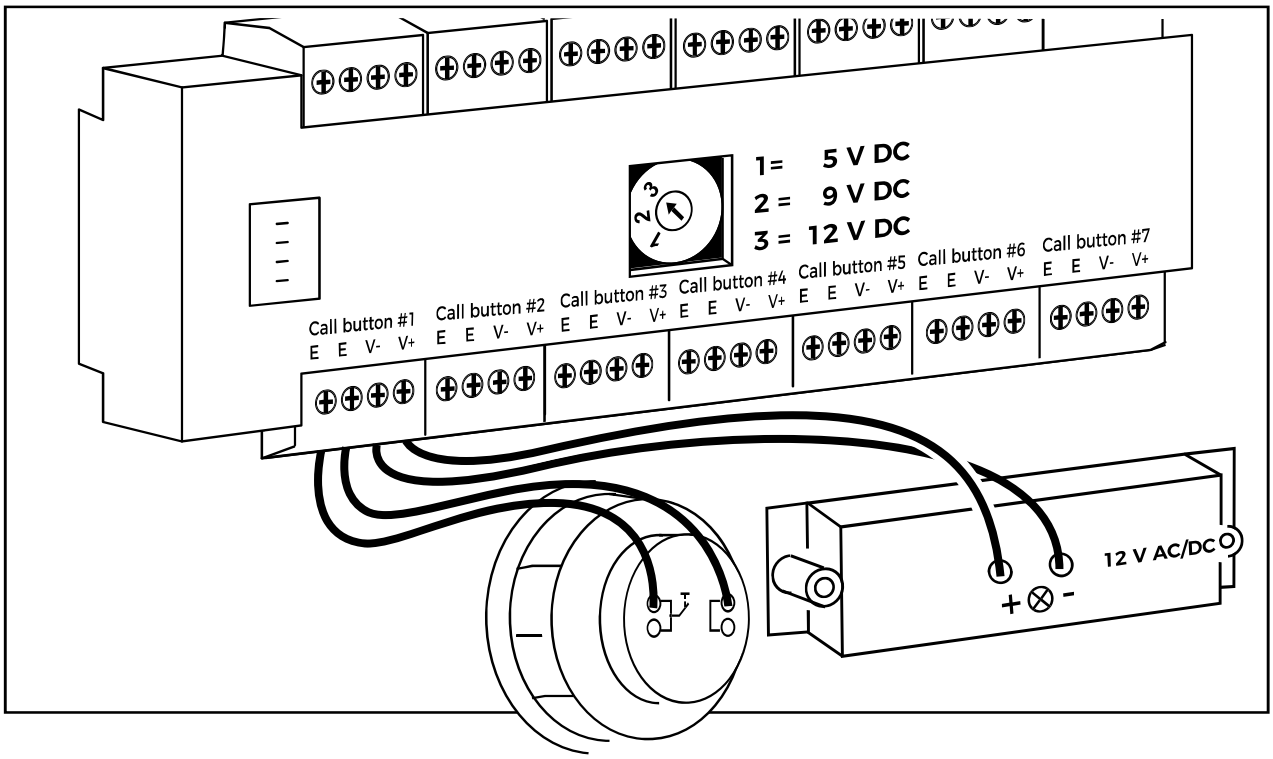




Errors and omissions excepted. | Last update 02/2025 - Copyright © ASSA ABLOY – www.doorbird.com