D2107V/D2108V/D2110V surface mounting housing (backbox)

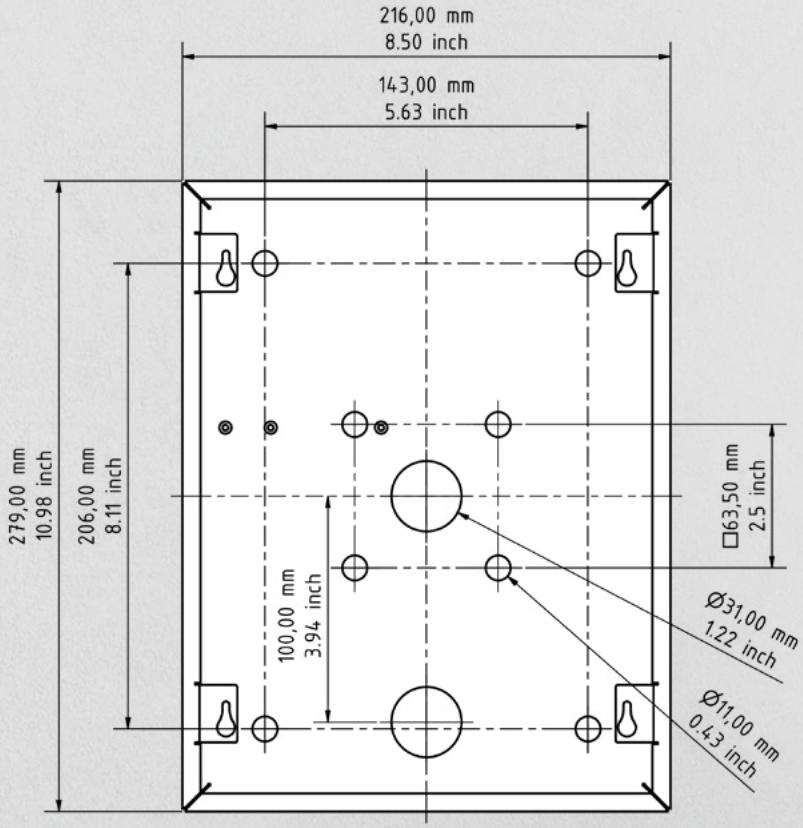

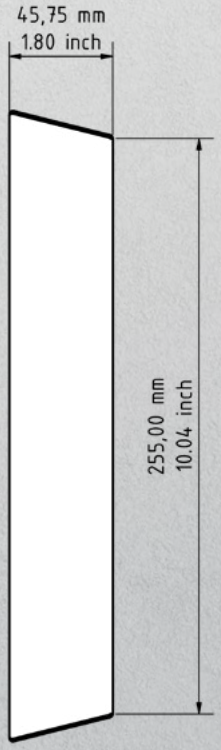

Errors and omissions excepted. | Last update 10/2020 - Copyright © 2020 Bird Home Automation GmbH – www.doorbird.com